REXNORD

PRODUCT CATALOG

OMEGA® ELASTOMERIC COUPLINGS

IMPERIAL

RegalRexnord™

Table of Contents

DESCRIPTION **PAGE**

Omega® Elastomeric Couplings Overview 3
Selection Procedures 4
Typical Service Factors – Motor and Turbine Driven Equipment 5

CLOSE-COUPLED COUPLINGS
Omega Close-Coupled Design with Straight Bore Hubs 6
Omega Close-Coupled Design with Taper-Lock Bushed Hubs 7

SPACER COUPLINGS
Omega Spacer Design with Straight Bore Hubs 8
Omega Spacer Design with Taper-Lock Bushed Hubs 9
Omega Extended Spacer Design 10

ADDITIONAL COUPLINGS AND TECHNICAL DATA
Special Designs 11
Adjustability 11
Ordering Instructions 12
Element and Hub Part Numbers 13
Bore Specifications 14
Maximum bores with Shallow Keyways 15

Lowest Total Cost of Ownership

The unique split-in-half flex element and reversible hubs significantly decrease total costs by reducing inventory and assembly time.

Rexnord Omega Couplings are non-lubricated, material-flexing couplings utilizing a specially formulated polyurethane material engineered for maximum durability, strength and fatigue resistance. Omega couplings can operate in horizontal or vertical applications without additional components.

Easy installation and visual maintenance inspection make these couplings a perfect selection for a broad array of industrial applications.

Features and Benefits

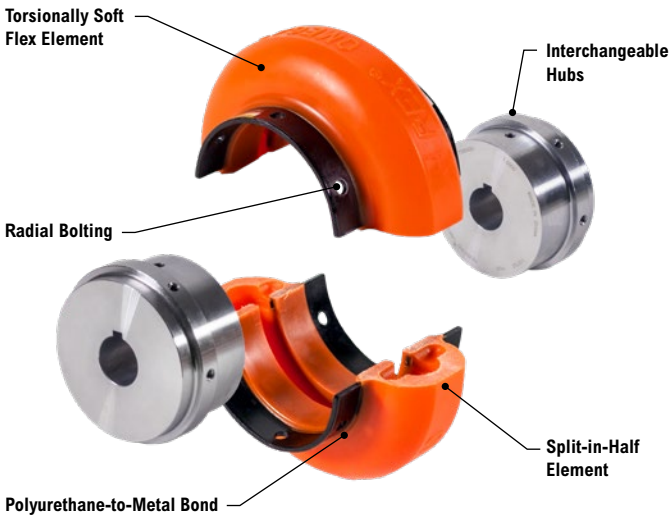

- **Torsionally Soft Flex Element** cushions shock loads and vibration, extending equipment life.
- **Split-in-Half Element** design allows for simplified assembly and disassembly without disturbing hubs or connected equipment.
- **Polyurethane-to-Metal Bond** eliminates assembly and slippage problems associated with mechanically clamped designs.
- **Interchangeable Hubs** between close coupled and spacer coupling elements. Hubs have identical bolting patterns which allows for reduced inventory, and are reversible to accommodate a variety of shaft spacing arrangements. Hubs are available in carbon steel, 303-304 stainless steel, or with electroless nickel plating.

Element Design Options

Omega Coupling elements are offered in Close Coupled (E), Spacer (ES), and Half Spacer (E/ES) designs to accommodate a variety of standard and non-standard Distance Between Shaft Ends (DBSE). Spacer elements offer multiple radial bolting holes that accommodate all shaft gaps between the minimum and the maximum using the same components. Sleeve extensions are supplied when shaft spacing requirements require a greater DBSE than the standard spacer element can provide.

Element Options

Standard

- General purpose applications requiring the highest misalignment capacity

Heavy Duty Yellow (HDY)

- 25% greater torque capacity over Standard element catalog ratings allows for possible coupling downsizing
- Interchangeable with existing hubs

Hydrolytically Stable Urethane (HSU)

- Ideal for hot and humid conditions, acidic or alkaline environments
- 12-16 year shelf life
- Interchangeable with existing hubs

Misalignment Capacity

Omega Standard and HSU elements maintain their service life for any combination of parallel and angular misalignment measurements which fall on or below the line of the respective size. For Omega HDY, misalignment is limited to 2 degrees angular and 1/32" parallel. (Permissible misalignment values are shown in the yellow region and below the corresponding coupling size dotted line.)

Reliable and efficient equipment operation is directly related to coupling alignment.

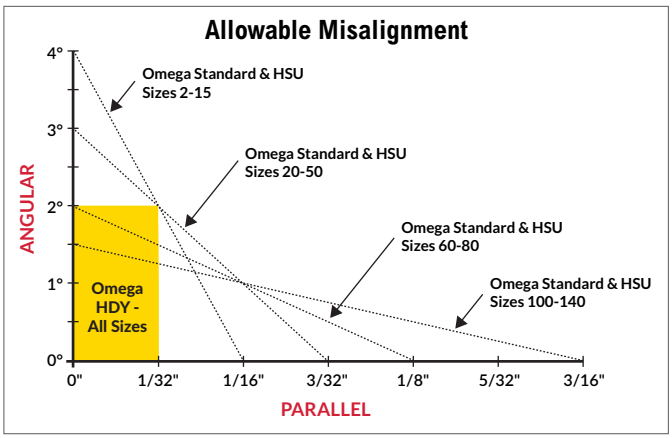

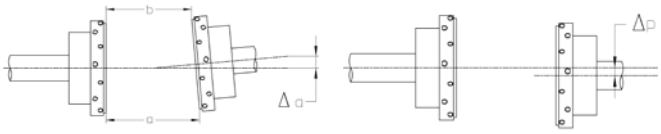

Angular Misalignment **Parallel Misalignment**

Regal Rexnord™ is the leading coupling provider in the industry with a full-line of available solutions supported by trained customer service and application engineering professionals focused on our coupling product lines. For more information, visit regalrexnord.com, or contact (866)-REXNORD.

Selection Procedures

1. **Determine Operating Torque:** $\left(\frac{63{,}025 \times HP}{RPM}\right)$
2. **Multiply by Service Factor:**
   Select the proper Service Factor from Table on **page 5**.
3. **Select the Coupling Size:**
   Select coupling size from **Table 1** with a capacity equal to or greater than determined in Step 2.
4. **Follow steps 5 & 6 below.**

OR

1. **Determine HP/100 RPM:** $\left(HP/100\ RPM = \frac{Horsepower \times 100}{RPM}\right)$
2. **Determine Service Factor:**
   Select the proper Service Factor from Table on **page 5**. If not listed, see Load Classification Table on **page 5**. Remember to consider both driver and driven equipment and temperature requirements.
3. **Multiply HP/100 by the service factor to get equivalent HP/100 RPM.**
4. **Select the Coupling Size:**
   From **Table 1**, with a rating equal to or greater than the HP/100 RPM determined in Step 3.
5. **Check Maximum Speed:**
   Be sure that the operating speed of the coupling does not exceed maximum RPM listed on **pages 6-10**.
6. **Select Desired Hub Type:**
   Select hub type and check maximum allowable bore.
7. **Select Element Design:**
   Select element design to meet shaft gap requirement.

Table 1

Size		Continuous Torque (lb-in)	HP/100 RPM
Standard	Spacer		
E2	ES2	190	0.3
E3	ES3	365	0.58
E4	ES4	550	0.88
E5	ES5	925	1.48
E10	ES10	1,450	2.3
E15	ES15	1,800	2.86
E20	ES20	2,300	3.65
E30	ES30	3,650	5.79
E40	ES40	5,500	8.85
E50	ES50	7,650	12.14
E60	ES60	12,500	19.84
E70	ES70	22,125	35.12
E80	ES80	39,500	62.7
E100	N/A	85,050	135
E120	N/A	170,100	270
E140	N/A	340,200	540

Peak torque capacity of coupling is 250% of above continuous ratings.

Service Factors

Service Factors are a means of classifying different equipment and applications into various load classifications. Due to variations in application of equipment, service factors are used to adjust equipment ratings to accommodate for variable loading conditions. This is a general guide. More specific factors are given on **page 5**.

	Load Classifications	Service Factors
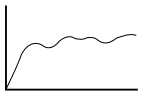	Continuous service and running loads vary only slightly.	1.0
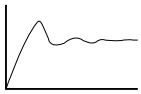	Torque loading varies during operation of the equipment.	1.5
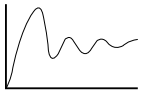	Torque loading varies during operation, frequent stop/start cycles are encountered.	2.0
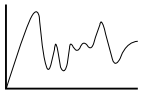	For shock loading and substantial torque variations.	2.5
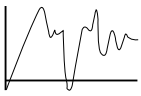	For heavy shock loading or light reversing drives.	3.0
	Reversing torque loads do not necessarily mean reversal of rotation. Depending upon severity of torque reversal, such loads must be classified between “medium” and “extreme.”	Consult Regal Rexnord™

Omega® Element Temperature Range (Ambient) ①	
-40°F	-40°C
to	
+200°F	+93°C

High Temperature Service Factor Adjustment ①	
Ambient Temp.	S.F. Adjust.
+150°F (66°C)	0.25
+165°F (74°C)	0.50
+180°F (82°C)	0.75
+200°F (93°C)	1

① Added to application service factor.

The service factor adjustment for high temperature is in addition to the service factor consideration for the driver and driven equipment. However, if high temperatures are typical for a specific application, maximum temperature consideration is incorporated into the “typical” service factor listing on **page 5**, i.e., steel mill runout tables.

Typical Service Factors – Motor and Turbine Driven Equipment ①

General Application	Typical Service Factor
AGITATORS	
Vertical and Horizontal Screw Propeller, Paddle	1.5
BLOWERS	
Centrifugal	1.0
Lobe or Vane	1.5
CAR DUMPER AND PULLER	2.0
COMPRESSORS	
Centrifugal	1.0
Lobe or Vane	1.5
Screw	1.25
Reciprocating	②
CONVEYORS	
Apron, Assembly, Belt, Chain, Flight, Oven	1.5
Reciprocating	②
Screw	1.25
CRANES AND HOISTS	
Main Hoist – Medium Duty	2.0
Main Hoist – Heavy Duty	2.5
Skip Hoist	2.0
Bridge, Travel or Trolley	2.0
DREDGES	
Cable Reel, Conveyor	2.0
Cutter Head Drive, Jig Drive	3.0
Pump, Screen, Drive, Stacker, Utility Winch	2.0
DYNAMOMETER	1.0
ELEVATORS	
Bucket, Freight	2.5
EXCITER, GENERATOR	1.0
EXTRUDER, PLASTIC	2.0
FANS	
Centrifugal	1.0
Cooling Tower	2.0
Forced Draft and Induced Draft	1.5
Large Mine	2.0
Propeller	1.5
GENERATORS	
Even Load	1.0
Hoist or Railway Service	2.0
Welder Load	2.5
PRINTING PRESS	2.0
PUMPS	
Centrifugal	1.0
Positive Displacement	1.5
Gear, Lobe, Vane	1.5
Reciprocating	②
Progressive Cavity	1.25
Peristaltic	1.5
Screw	1.25
SCREENS	
Air Washing	3.0
Grizzly	1.0
Coal and Sand (Rotary)	2.0
Vibrating	5.0
SEWAGE DISPOSAL EQUIPMENT	1.5
STOKER	1.5

Industry Application	Typical Service Factor
AGGREGATE PROCESSING, CEMENT	
Concrete Mixers	2.0
Crushers, Ore or Stone	3.0
Dryer, Rotary	2.0
Grizzly	3.0
Hammermill	2.5
Mining Kilns	2.5
Tube, Rod and Ball Mills	2.5
Tumbling Mill or Barrel	2.0
BREWERY AND DISTILLING	
Bottling and Can Filling Machinery, Brew Kettle, Cooker, Mash Tub	1.0
Scale Hopper (frequent peaks)	2.0
FOOD INDUSTRY	
Bottle and Can Filling	1.0
Cereal Cooker	1.0
Dough Mixer, Meat Grinder	2.0
LUMBER INDUSTRY	
Band Resaw, Circular Resaw	2.0
Edger, Head Rig, Hog, Log Haul	2.5
Planer	2.0
Rolls, Non-Reversing	2.0
Rolls, Reversing	2.5
Sawdust Conveyor	1.5
Slab Conveyor, Sorting Table	2.0
OIL INDUSTRY	
Chiller	1.0
POWER INDUSTRY	
Ash Handling Conveyors	1.5
Baghouse Air Handling Fans	1.5
Ball Mill	2.5
Belt Conveyors	1.5
Circulating pumps (centrifugal)	1.0
Coal Grinders and Crushers	2.5
Coal Pulverizers and Hammermills	2.5
Cooling Tower Fans	2.0
FGD Slurry Pumps (centrifugal)	1.0
Forced Draft Fan and Induced Draft Fan	1.5
Primary Air, Recycling Fans	1.5
Traveling Water Screens	1.0

Industry Application	Typical Service Factor
PULP & PAPER MILLS	
Agitator	1.5
Barking Drum	3.0
Beater and Pulper	2.0
Bleacher	1.0
Calendar	2.5
Chipper	3.5
Couch, Cylinder Dryer	2.0
Felt Stretcher	1.0
Fourdrinier	2.0
Jordan	2.5
Press	2.5
Pulp Grinder	2.5
Stock Chests	1.5
Stock Pump	
Centrifugal	1.25
Reciprocating	2.5
Suction Roll	2.5
Winder	2.0
RUBBER INDUSTRY	
Banbury Mixer	3.0
Calendar	2.5
Cracker, Mix Mill, Plasticator, Refiner, Sheeter, Tire Building Machine	2.0
Tire and Tube Press Opener	1.0
Tiber and Strainer	2.0
Warming Mill	2.5
Washer	3.0
STEEL INDUSTRY	
Coilers	2.0
Draw Benches	2.0
Edger Drives	2.0
Reel Drives	2.0
Runout Tables (Non-Reversing)	3.0
Runout Tables (Reversing)	4.5
Soaking Pit Cover Drives	3.0
Tube Conveyor Rolls	2.5
Wire Drawing	2.0
TEXTILE MILLS	
Batcher, Calender, Card Machine, Dry Can	2.0
Dyeing Machinery	1.0
Loom	2.0
Mangle, Napper, Soaper	1.5
Spinner, Tenter Frame	2.0

① The Service Factors listed are intended only as a general guide and for smooth power sources such as electric motors. For reciprocating prime movers, such as diesel or gas engines, add the following service factor:
For 8 or more cylinders, add 0.5
For 6 cylinders, add 1.0
For 4 cylinders, add 1.5
For less than 4 cylinders, consult Regal Rexnord™
Add 0.5 to service factor if drive is a hydraulic motor.
Omega® Couplings are not recommended for turbine drives if the coupling cannot be protected from steam leakage or from speeds in excess of the coupling's published rating (**pages 6-10**).

② Consult Regal Rexnord Engineering.

IMPORTANT NOTE: The coupling selection criteria is intended for the determination of the coupling and style only. It is also recommended that the system be analyzed for torsional stability using the specific coupling mass-elastic data available from Regal Rexnord. This analysis is the responsibility of the user since the coupling is only a single component in the system.

SLEEVE BEARINGS: Drive systems sensitive to axial movement such as sleeve bearing motors require the use of a limited end float ring to maintain axial positioning. Consult Regal Rexnord for design requirements and recommended installation practices.

CAUTION: Omega Couplings are not recommended for applications where both the driver and driven equipment are of reciprocating type. Contact Regal Rexnord Application Engineering for review of Omega Coupling selection for reciprocating applications.

Omega Close-Coupled Design with Straight Bore Hubs

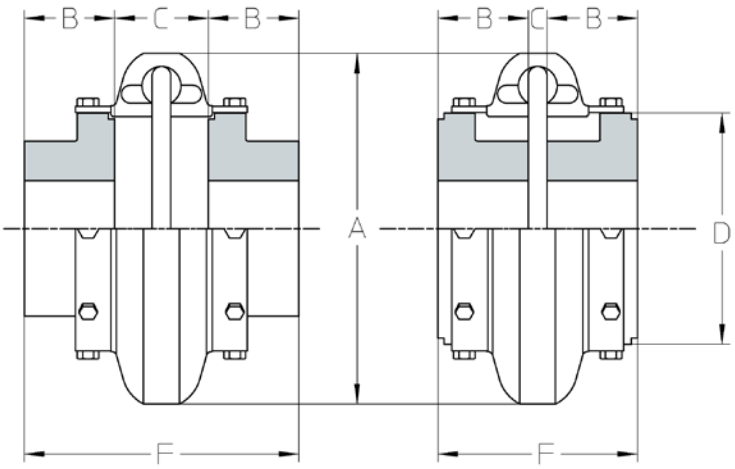

HUBS OUTBOARD **HUBS INBOARD**

NOTE: Hub shoulder design varies per coupling size. Consult Regal Rexnord™ for specific size assembly drawings.

Coupling Size	Maximum Bore (in) ⑤	Minimum Bore (in)	Continuous HP/100 RPM	Continuous Torque (lb-in) ②	Maximum RPM	Dimensions (in)							Weight (lb) ④
						A	B	C		D	F		
								(In) ③	(Out)		(In)	(Out)	
E2	1.13	No Min	0.30	190	6600	3.50	0.94	1.34	1.90	1.85	3.22	3.78	1.2
E3	1.38	0.375	0.58	365	6600	4.00	1.50	0.81	1.31	2.32	3.81	4.31	2.4
E4	1.63	0.375	0.88	550	6600	4.56	1.69	0.44	1.31	2.60	3.81	4.69	3.0
E5	1.88	0.375	1.48	925	6600	5.38	1.75	0.81	1.81	3.13	4.31	5.31	5.4
E10	2.13	0.375	2.30	1450	6600	6.38	1.88	0.56	1.84	3.65	4.31	5.56	8.2
E15	2.13	0.375	2.86	1800	6600	6.38	1.88	0.56	1.84	3.65	4.31	5.56	8.3
E20	2.38	0.75	3.65	2300	6600	7.25	2.06	0.50	2.38	4.48	4.62	6.50	13.0
E30	2.88	0.75	5.79	3650	5800	8.25	2.31	0.56	2.44	5.42	5.19	7.06	21
E40	3.38	0.75	8.85	5500	5000	9.50	2.50	0.56	2.68	6.63	5.56	7.68	35
E50	3.63	1.125	12.14	7650	4200	11.00	2.75	0.63	3.38	8.13	6.13	8.88	54
E60	4	1.125	19.84	12,500	3800	12.50	3.25	0.69	3.44	8.75	7.19	9.94	72
E70	4.5	1.375	35.12	22,125	3600	14.00	3.62	0.75	3.75	9.25	8.00	11.00	86
E80	6	1.875	62.7	39,500	2000	16.00	4.87	0.75	5.00	11.25	10.50	14.75	170
E100	6.75	1.875	135	85,050	1900	21.00	5.50	1.75	3.75	14.13	12.75	14.75	244
E120	7.5	1.875	270	170,100	1800	25.00	6.00	2.25	4.88	17.63	14.24	16.88	425
E140	9.00	1.875	540	340,200	1500	30.00	7.00	3.00	5.00	20.88	17.00	19.00	746

① HDY element continous torque rating is 25% greater than Standard and HSU elements.
② Peak torque rating is 250% of the allowable Continuous Torque Rating.
③ Minimum distance between shaft ends is .125 inches.
④ With max bore hubs.
⑤ See **page 15** for larger bore capacities with shallow keyways.

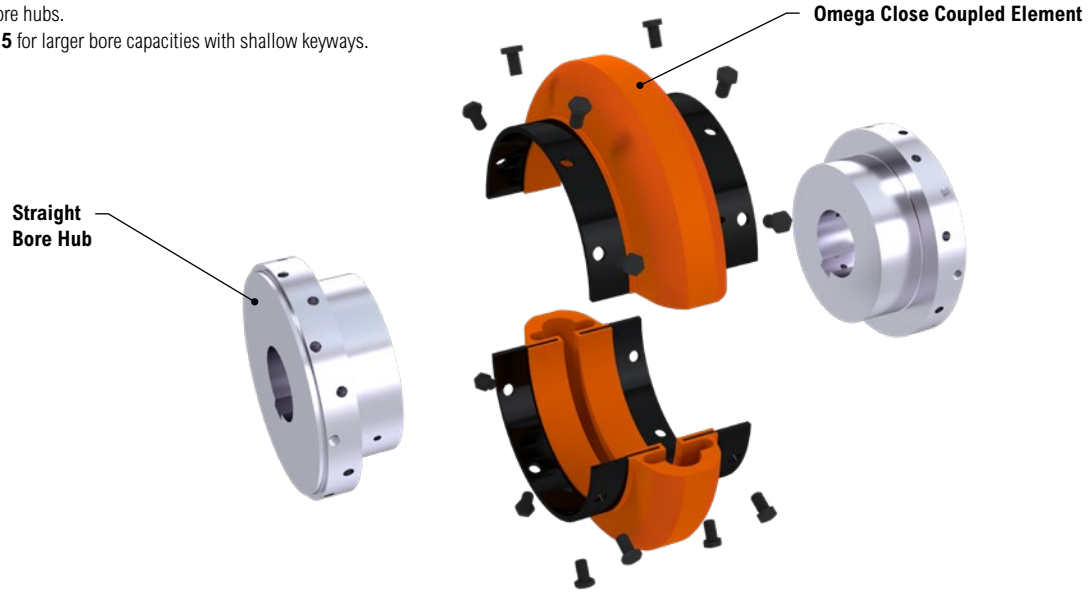

NOTE: Dimensions subject to change. Certified dimensions of ordered material furnished on request.

Omega Close-Coupled Design with Compression Bushed Hubs

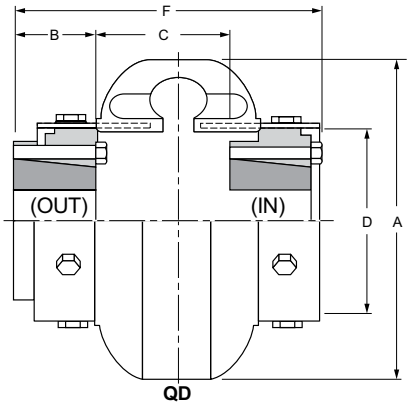

QD

NOTE: Bushings are NOT included with hubs

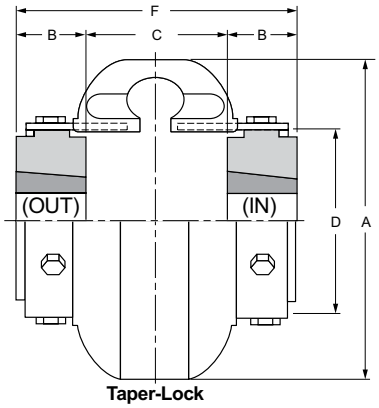

Taper-Lock

Specification Data with QD Hubs

Coupling Size	QD Bush. No.	Recom. Maximum Bore ①	Continuous HP/100 RPM	Continuous Torque (lb-in)	Maximum RPM	Dimensions (in)							Weight (lb) ③
						A	B	C		D	F		
								(In) ④	(Out)		(In) ④	(Out)	
E4	JA	1.19	0.88	550	6600	4.56	1.00	1.22	1.88	2.60	3.22	3.88	2.1
E5	SH	1.63	1.48	925	6600	5.38	1.25	1.75	1.88	3.13	4.25	4.50	3.6
E10	SDS	1.94	2.30	1450	6600	6.38	1.31	1.19	2.31	3.65	3.81	4.94	4.8
E15	SDS	1.94	2.86	1800	6600	6.38	1.31	1.19	2.31	3.65	4.24	4.94	4.9
E20	SK	2.50	3.65	2300	6600	7.25	1.88	0.62	2.62	4.48	4.25	6.38	8.5
E30	SF	2.94	5.79	3650	5800	8.25	2.00	1.44	2.19	5.42	5.44	6.19	14.0
E40	E	3.50	8.85	5500	5000	9.50	2.63	1.25	1.75	6.63	6.50	7.00	23.8
E50	E	3.50	12.14	7650	4200	11.00	2.63	1.37	2.88	8.13	6.63	8.13	37.6
E60	F	3.94	19.84	12,500	3800	12.50	3.63	1.50	1.89	8.75	8.75	9.13	45.5
E70	J	4.50	35.12	22,125	3600	14.00	4.50	1.31	1.43	9.25	13.31	10.43	68.1
E80	M	5.50	62.70	39,500	2000	16.00	6.75	0.75	1.25	11.25	14.25	14.75	140
E100	M	5.50	135	85,050	1900	21.00	6.80	1.75	1.16	14.13	15.34	14.75	250
E120	N	6.00	238 ⑥	150,000 ⑥	1800	25.00	8.12	1.74	1.16	17.63	17.96	16.88	475
E140	P	7.00	396 ⑥	250,000 ⑥	1500	30.00	9.36	0.30	3.00	20.88	19.00	21.78	782

NOTE: Dimensions may vary depending on bushing manufacturer.

Specification Data with Taper-Lock Hubs

Coupling Size	TL Bush. No.	Recom. Maximum Bore ①	Continuous HP/100 RPM ②	Continuous Torque (lb-in) ②	Maximum RPM	Dimensions (in)							Weight (lb) ③
						A	B	C		D	F		
E3	1008	1.00	0.58	365	6600	4.00	0.88	1.68		2.32	3.44		1.8
E4	1008	1.00	0.88	550	6600	4.56	0.88	1.68		2.60	3.44		2.6
E5	1108	1.13	1.48	925	6600	5.38	0.88	2.19		3.13	3.94		4.0
E10	1310	1.44 ⑦	2.30	1450	6600	6.38	1.00	2.06		3.65	4.06		6.0
E15	1310	1.44 ⑦	2.86	1800	6600	6.38	1.00	2.06		3.65	4.24		6.1
E20	1610	1.69 ⑦	3.65	2300	6600	7.25	1.00	2.50		4.48	4.50		9.0
E30	2012	2.12 ⑦	5.79	3650	5800	8.25	1.25	2.56		5.42	5.06		13.6
E40	2517	2.69 ⑦	8.85	5500	5000	9.50	1.75	2.38		6.63	5.88		21.8
E50	2517	2.69 ⑦	12.14	7650	4200	11.00	1.75	3.00		8.13	6.50		31.5
E60	3020	3.25 ⑦	19.84	12,500	3800	12.50	2.00	3.31		8.75	7.31		46.6
E70	3535	3.94	35.12	22,125	3600	14.00	3.50	2.38		9.25	9.38		66.7
E80	4040	4.44	62.70	39,500	2000	16.00	4.00	3.75		11.25	11.75		82
								(In)④	(Out)		(In)④	(Out)	
E100	4545	4.94	135	85,050	1900	21.00	4.50	1.50	6.00	14.13	10.50	15.00	250
E120	5050	5.00	238 ⑥	126,000 ⑥	1800	25.00	5.00	2.00	7.13	17.63	12.00	17.13	408
E140	7060 ⑤	7.00 ⑤	540	340,200	1500	30.00	6.00	3.00	7.00	20.88	15.00	19.00	660

① With shallow keyway.
② This rating may be limited by the bushing rating if severe service conditions exist. Consult bushing manufacturer.
③ Without compression bushings.
④ Inboard hub mounting (see drawing on **page 6**) requires bushing installation from coupling ends. Allow space (extra "B" dimension) between coupling ends and equipment for bushing assembly/disassembly. Reverse taper hubs are available; consult Regal Rexnord™.
⑤ An 8065 bushing hub with 8.00" max bore is also available. Consult Regal Rexnord.
⑥ Maximum bushing rating.
⑦ With steel bushings.

NOTE: Dimensions subject to change. Certified dimensions of ordered material furnished on request.

Omega Spacer Design with Straight Bore Hubs

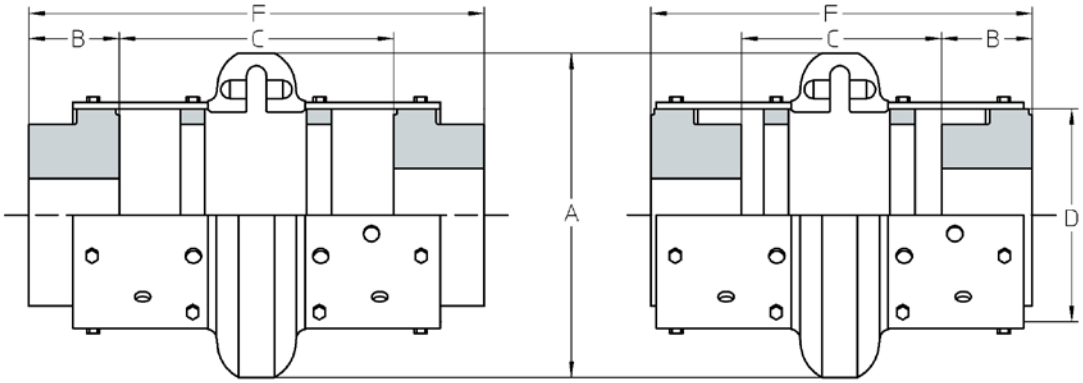

HUBS MOUNTED OUTBOARD **HUBS MOUNTED INBOARD**

Coupling Size ①	Recom. Maximum Bore ⑥	Continuous HP/100 RPM	Continuous Torque (lb-in)	Maximum RPM ②	Dimensions (in)							Weight (lb) ⑤
					A	B	C		D	F		
							(In) ③	(Out)		(In) ④	(Out)	
ES2-R	1.13	0.30	190	6600	3.50	0.94	3.50	4.00	1.85	5.75	5.92	2.3
ES3-R	1.38	0.58	365	6600	4.00	1.50	3.50	5.00	2.32	7.25	8.00	4.0
ES4-R	1.63	0.88	550	6600	4.56	1.69	3.50	5.00	2.60	7.25	8.38	5.1
ES5-R	1.88	1.48	925	6600	5.38	1.75	3.50	5.00	3.13	7.25	8.50	7.5
ES10-R	2.13	2.30	1450	6600	6.38	1.88	3.50	5.00	3.65	7.25	8.75	10.3
ES15-R	2.13	2.86	1800	6600	6.38	1.88	3.50	5.00	3.65	7.25	8.75	10.4
ES20	2.38	3.65	2300	4800	7.25	2.06	2.55	7.00	4.48	9.38	11.12	15.6
ES30	2.88	5.79	3650	4200	8.25	2.31	2.05	7.00	5.42	9.38	11.62	25.1
ES40	3.38	8.85	5500	3600	9.50	2.50	1.67	7.00	6.63	9.38	12.00	40
ES50	3.63	12.14	7650	3100	11.00	2.75	1.17	7.00	8.13	9.38	12.50	60
ES60	4.00	19.84	12,500	2800	12.50	3.25	2.67	9.75	8.75	12.50	16.25	84
ES70	4.50	35.12	22,125	2600	14.00	3.62	1.99	9.75	9.25	12.50	17.00	102
ES80	6.00	62.70	39,500	1800	16.00	4.87	2.18	9.75	11.25	12.50	19.50	180

① Suffix "R" designates high speed ring design. Rings are furnished standard for sizes ES2-R to ES15-R, optional for sizes ES20 to ES80.
② Spacer coupling furnished with optional high speed rings (sizes ES20 to ES80) can be operated up to maximum allowable speeds for standard series couplings. See RPM Ratings on **page 6**.
③ Minimum shaft spacing is .125 inches. See **page 11** for additional information.
④ Overall length of element.
⑤ With max bore hubs.
⑥ See **page 15** for larger bore capacities with shallow keyways.

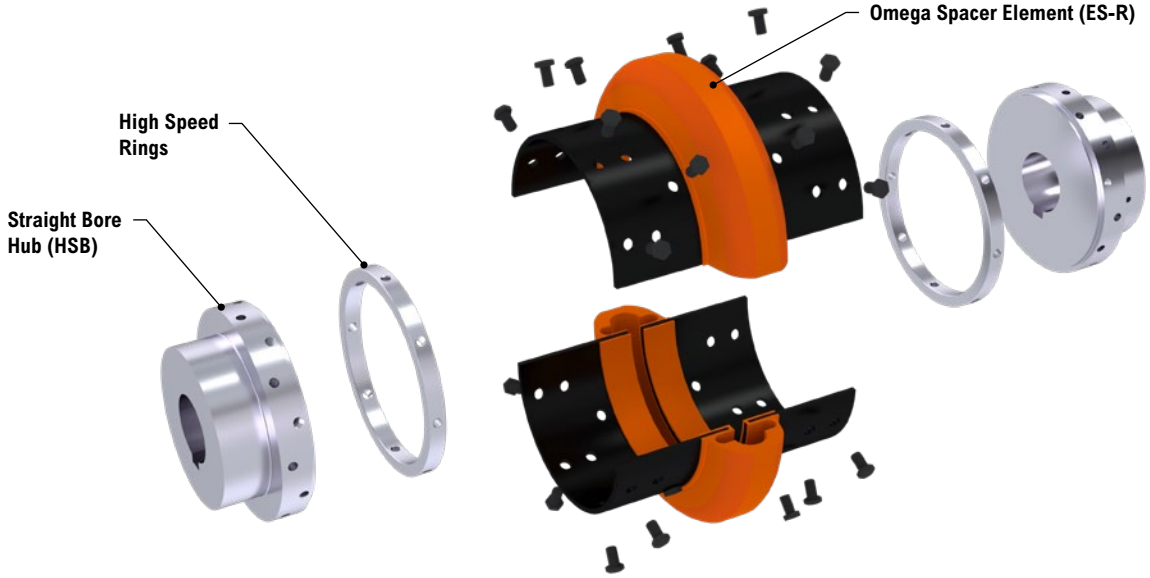

NOTE: Dimensions subject to change. Certified dimensions of ordered material furnished on request.

Omega Spacer Design with Compression Bushed Hubs

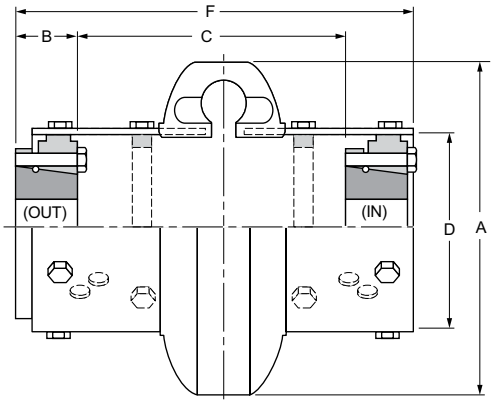

QD

NOTE: Bushings are NOT included with hubs

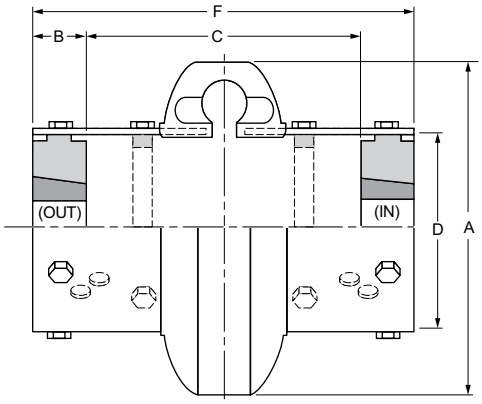

Taper-Lock

Specification Data with QD Hubs

Coupling Size ①	QD Bush. No.	Recom. Maximum Bore ②	Continuous HP/100 RPM	Continuous Torque (lb-in)	Maximum RPM ④	Dimensions (in)							Weight (lb) ⑥
						A	B	C		D	F		
								(In) ⑤	(Out)		(In) ⑤	(Out)	
ES4-R	JA	1.19	0.88	550	6600	4.56	1.00	3.24	5.56	2.60	7.25	7.71	4.2
ES5-R	SH	1.63	1.48	925	6600	5.38	1.25	3.51	5.06	3.13	7.25	7.82	5.7
ES10-R	SDS	1.94	2.30	1450	6600	6.38	1.31	3.60	5.49	3.65	7.25	8.24	6.9
ES15-R	SDS	1.94	2.86	1800	6600	6.38	1.31	3.60	5.49	3.65	7.25	8.24	7.0
ES20	SK	2.50	3.65	2300	4800	7.25	1.88	2.82	6.96	4.48	9.38	10.84	11.1
ES30	SF	2.94	5.79	3650	4200	8.25	2.00	3.36	6.44	5.42	9.38	10.32	17.9
ES40	E	3.50	8.85	5500	3600	9.50	2.63	2.94	5.74	6.63	9.38	10.71	28.8
ES50	E	3.50	12.14	7650	3100	11.00	2.63	2.44	6.24	8.13	9.38	11.21	43.6
ES60	F	3.94	19.84	12,500	2800	12.50	3.63	4.25	7.68	8.75	12.50	14.65	57.4
ES70	J	4.50	35.12	22,125	2600	14.00	4.50	3.50	6.72	9.25	12.52	15.40	84.1
ES80	M	5.50	62.70	39,500	1800	16.00	6.75	1.35	4.76	11.25	14.17	17.58	150.0

NOTE: Dimensions may vary depending on bushing manufacturer.

Specification Data with Taper-Lock Hubs

Coupling Size ①	TL Bush. No.	Recom. Maximum Bore ②	Continuous HP/100 RPM	Continuous Torque (lb-in)	Maximum RPM ④	Dimensions (in)							Weight (lb) ⑥
						A	B	C		D	F		
								(In) ⑤	(Out)		(In) ⑤	(Out)	
ES3-R	1008	1.00	0.58	365	6600	4.00	0.88	3.83	5.38	2.32	7.25	7.25	3.2
ES4-R	1008	1.00	0.88	550	6600	4.56	0.88	3.83	5.38	2.60	7.25	7.25	4.2
ES5-R	1108	1.13	1.48	925	6600	5.38	0.88	3.83	5.38	3.13	7.25	7.25	6.0
ES10-R	1310	1.44 ⑦	2.30	1450	6600	6.38	1.00	3.71	5.25	3.65	7.25	7.25	7.9
ES15-R	1310	1.44 ⑦	2.86	1800	6600	6.38	1.00	3.71	5.25	3.65	7.25	7.25	8.0
ES20	1610	1.69 ⑦	3.65	2300	4800	7.25	1.00	4.84	6.75	4.48	9.38	9.38	11.9
ES30	2012	2.12 ⑦	5.79	3650	4200	8.25	1.25	4.59	6.50	5.42	9.38	9.38	18.0
ES40	2517	2.69 ⑦	8.85	5500	3600	9.50	1.75	4.09	6.00	6.63	9.38	9.59	26.8
ES50	2517	2.69 ⑦	12.14	7650	3100	11.00	1.75	4.09	6.00	8.13	9.38	9.59	37.4
ES60	3020	3.25 ⑦	19.84	12,500	2800	12.50	2.00	6.09	8.75	8.75	12.50	12.84	60.7
ES70	3535	3.94	35.12	22,125	2600	14.00	3.50	4.59	7.34	9.25	12.50	14.34	81.4
ES80	4040	4.44	62.70	39,500	1800	16.00	4.00	4.09	6.84	11.25	12.50	14.84	93.2

① Suffix "R" designates high-speed ring design. Rings are furnished standard for sizes ES2-R to ES10-R, optional for sizes ES20 to ES80.
② With shallow keyway.
③ This rating may be limited by the bushing rating if severe service conditions exist. Consult bushing manufacturer.
④ Spacer coupling furnished with optional high speed rings (sizes ES20 to ES80) can be operated up to maximum allowable speeds for standard series couplings.
⑤ Minimum shaft spacing is 0.125". See **page 11** for additional information.
⑥ Without compression bushings.
⑦ With steel bushings.

NOTE: Dimensions subject to change. Certified dimensions of ordered material furnished on request.

Omega Extended Spacer Coupling

Rexnord® Omega® Extended Spacer Couplings are designed to connect equipment with shaft spacing requirements beyond the Omega Spacer Coupling capabilities. The extended spacer design can be an economic alternative to floating shaft couplings (i.e. stock pump applications).

Sleeve extensions ("SE") are furnished in steel. They mount to regular Omega Spacer Elements and all Omega Coupling Hubs. Sleeve Extensions can also be used to extend shaft gap capacity of larger size close coupled E100-E140 elements.

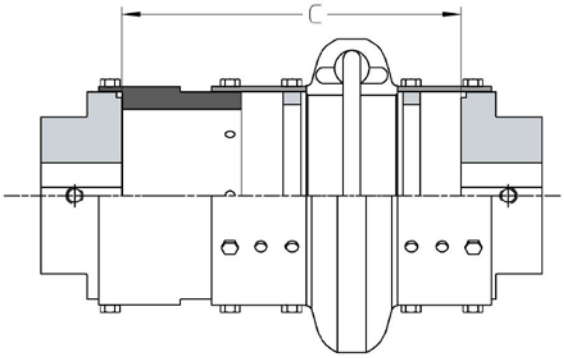

SINGLE EXTENSION

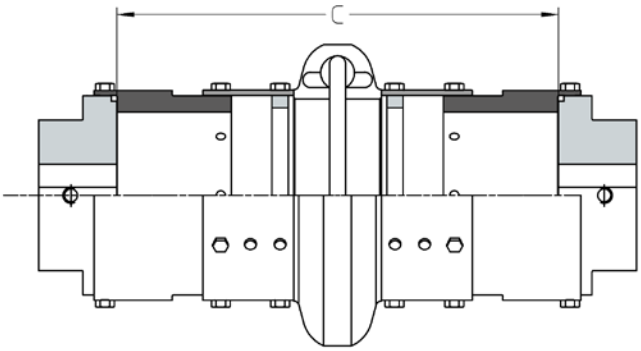

DOUBLE EXTENSION

Spacer Size	Maximum RPM Standard	Maximum RPM Matched Assembly ②	Maximum Spacing ① – "C" Dimension (in)									Weight (lb) One SE
			With SHRB Hubs			With HQD Hubs			With HTL Hubs			
			Maximum Without SE	One SE	Two SE	Maximum Without SE	One SE	Two SE	Maximum Without SE	One SE	Two SE	
ES3-R	1800	3600	5.00	7.00	9.00	–	–	–	5.38	7.38	9.38	1.2
ES4-R	1800	3600	5.00	7.00	9.00	5.56	7.56	9.56	5.38	7.38	9.38	1.4
ES5-R	1800	3600	5.00	7.00	9.00	5.06	7.06	9.06	5.38	7.38	9.38	1.5
ES10-R	1800	3600	5.00	7.00	9.00	5.49	7.49	9.49	5.25	7.25	9.25	1.6
ES15-R	1800	3600	5.00	7.00	9.00	5.49	7.49	9.49	5.25	7.25	9.25	1.6
ES20	1800	3600	7.00	9.75	12.50	6.96	9.71	12.46	6.75	9.50	12.25	3.7
ES30	1800	3600	7.00	9.75	12.50	6.44	8.97	11.72	6.50	9.25	12.00	4.5
ES40	1800	3600	7.00	9.75	12.50	5.74	8.23	10.98	6.00	8.75	11.50	5.3
ES50	1800	3100	7.00	9.75	12.50	6.24	8.73	11.48	6.00	8.75	11.50	8.0
ES60	1800	2800	9.75	14.38	19.00	7.68	12.31	16.93	8.75	13.38	18.00	20.8
ES70	1800	2600	9.75	15.13	20.50	6.72	12.10	17.47	7.34	12.72	18.09	34.6
ES80	1500	1800	9.75	15.38	21.00	4.76	10.39	16.01	6.84	12.37	18.00	46.2
E100	1500	1800	3.75	8.75	13.75	1.75	7.00	12.25	6.00	11.25	16.50	76.0
E120	1500	1800	4.88	10.13	15.38	1.74	6.74	11.74	7.13	12.13	17.13	81.3
E140	1200	1500	5.00	10.50	22.00	3.00	8.50	14.00	7.00	12.50	18.00	122.0

① Maximum spacings shown are with hubs mounted outboard and flush with shaft ends. Longer custom length extensions are available; consult Regal Rexnord™.
② Hub/sleeve extension assembly precisely machined and matched to obtain higher speed rating. Specify "Matched Assembly" when ordering.

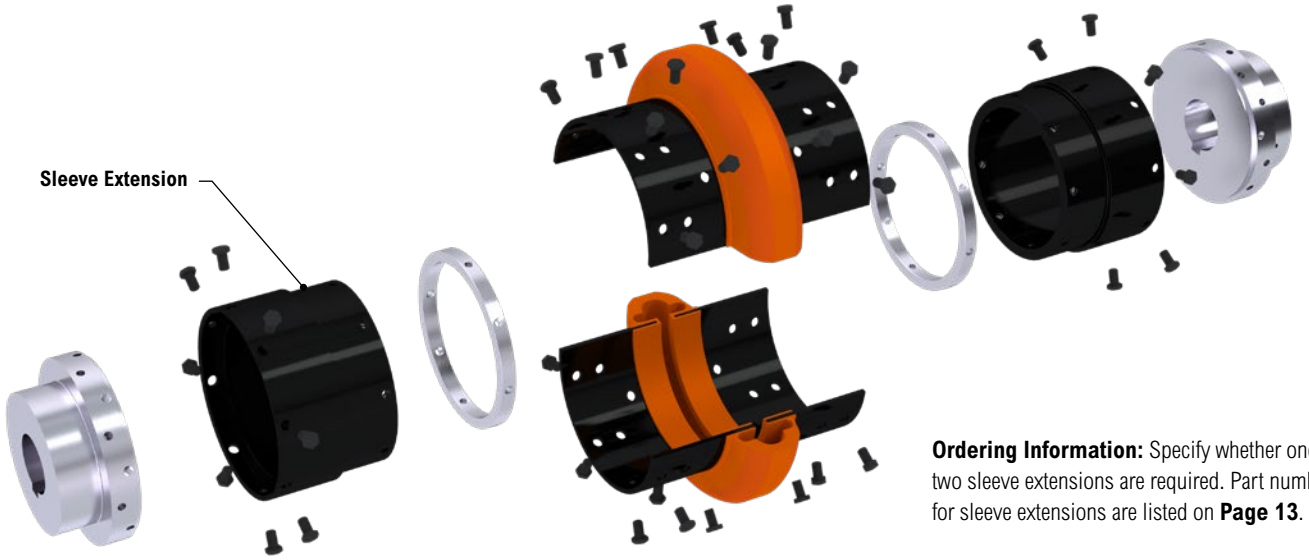

Ordering Information: Specify whether one or two sleeve extensions are required. Part numbers for sleeve extensions are listed on **Page 13**.

Omega E/ES Half Spacer Element

Option for a shorter element length than a standard ES spacer coupling. Available in Standard, HDY Yellow, or HSU Green materials.

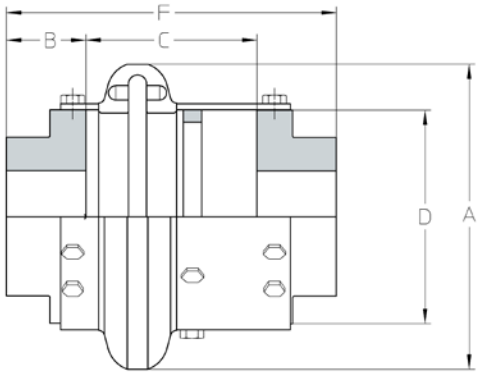

Coupling Size	Dimensions (in)				Weight (lb) ②
	C		F		
	(In) ①	(Out)	(In)	(Out)	
E2	2.42	2.95	4.49	4.85	1.8
E3	2.16	3.16	5.53	6.16	3.2
E4	1.97	3.16	5.53	6.54	4.1
E5	2.16	3.41	5.78	6.91	6.5
E10	2.03	3.42	5.78	7.16	9.3
E15	2.03	3.42	5.78	7.16	9.4
E20	1.53	4.69	7.00	8.81	14.3
E30	1.31	4.72	7.29	9.34	23.1
E40	1.12	4.84	7.47	9.84	37.5
E50	0.90	5.19	7.76	10.69	57.0
E60	1.68	6.60	9.85	13.10	78.0
E70	1.37	6.75	10.25	14.00	94.0
E80	1.47	7.38	11.50	17.13	175.0

① Minimum distance between shaft ends is .125 inches.
② With maximum bore hubs.

Rexnord Positive Drive Coupling

Interlocking hubs to meet fail-safe requirements.

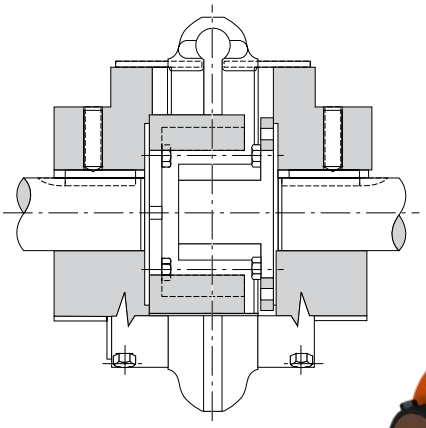

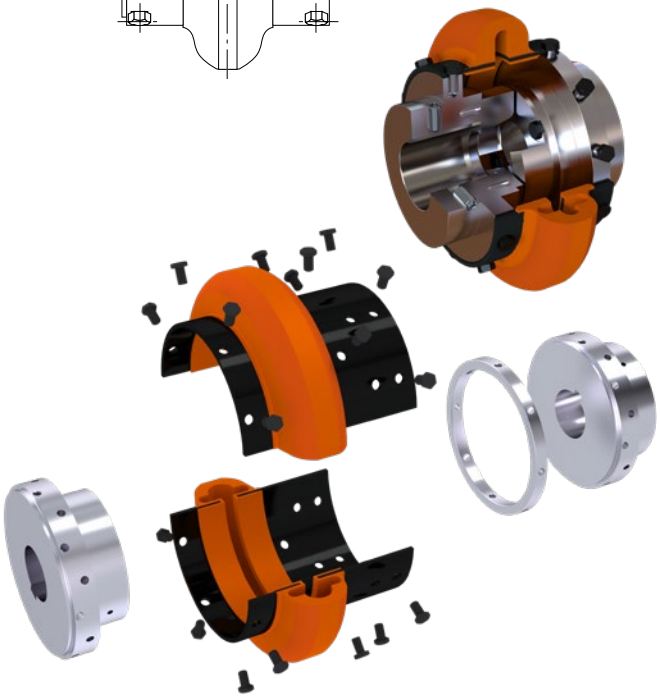

Electroless Nickel Plated Hubs

Omega® Hubs can be supplied with electroless nickel plating, or machined in stainless steel material to provide advanced corrosion protection over standard carbon steel hubs for applications in harsh environments.

Adjustability

Shaft Spacing Options

The Rexnord Omega Spacer Coupling design (**pages 8-9**) provides additional spacing between hubs. There are no interfering center member components which allows shaft spacing as small as .125 inches; however, for such small spacings, use of the standard Omega close coupled element would be recommended. The maximum shaft spacing for each coupling is shown on **pages 8-9**. Any shaft spacing between .125 inches and the maximum listed can be achieved without additional parts. Hubs can be mounted on shafts as shown below.

Overhanging Hubs

Hubs can be mounted flush with the shaft end (Figure A), recessed behind the shaft end (Figure B) or overhang the shaft end (Figure C). Shaft engagement with the hub should be greater than or equal to 80% of the hub length through bore. Compression bushed hubs require 100% shaft engagement.

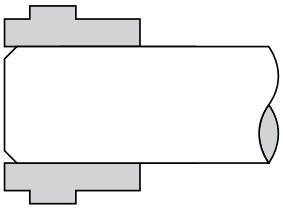

Figure A

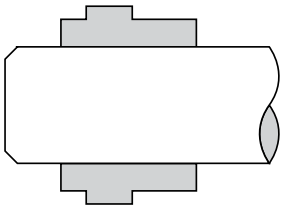

Figure B

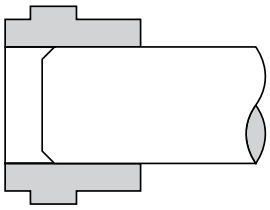

Figure C

Standard and Spacer Couplings

When ordering a complete coupling, specify coupling size, type of element and hubs bores.

Element

[E2 – E140] Close Coupled

[ES2-R – ES80] Spacer

Hub

[2HRB – 140HRB]	Hub – Rough Bore
[2HSB – 60HSB]	Hub – Stock Bore
[2HCB – 140HCB]	Hub – Custom Bore (specify bore and keyway)
[3HTL – 140HTL]	Hub – Taper-Lock® (bushing not included)

Order Example

Complete E50 close-coupled coupling with one finished bore 2-1/8" hub w/standard keyway and one QD hub less bushing. Order description:

1 ea. E50 Element

1 ea. 50HSB – 2-1/8" – std.

1 ea. 50 HQD – steel

Spline Bores

When ordering a complete coupling, specify coupling size, type of element and hubs bores.

1. Number of Teeth – Ex. 14T
2. Pitch Fraction – Ex. 12/24 Pitch
3. Pressure Angle – 30° P.A.
4. Type of Tooth Shape – Ex. Involute or Straight Side
5. Type of Root – Ex. Fillet or Flat Root
6. Tolerance – Ex. Class I through VII
7. Type of Fit – Ex. Side Fit or Major Diameter Fit

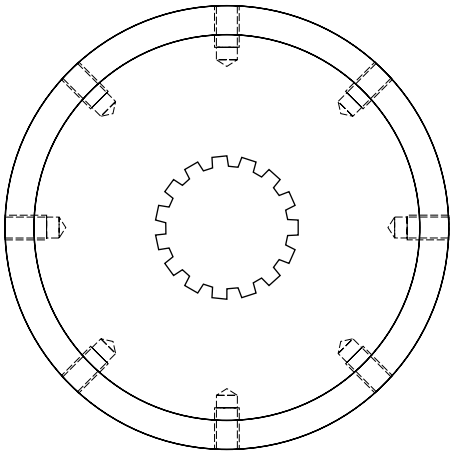

Tapered Bores

1. Drawing of HUB showing complete bore and keyway details.

— OR —

2. Drawing of SHAFT with dimensions shown below, allowing Regal Rexnord™ to bore hubs to suit.

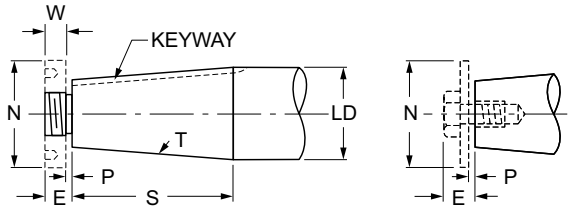

(LD) Large diameter, specify in decimals.

(S) Length of taper, measure parallel to shaft centerline.

(T) Taper per foot, difference in diameter in one foot length.

(P) Clearance space for drawing hub up on tapered shaft. Usually 1/8" or 1/4", depending on shaft size and taper.

(N) Nut or keeper plate diameter

NOTE: Specify if keyway is parallel to taper or if parallel to shaft centerline. Specify keyway depth at larger diameter of taper if keyway is parallel to shaft centerline.

With connected equipment in fixed position, the following additional information is necessary:

Dimensions "V" and "X" must be given when one or both connected machines are fixed on their bases. Advise if dimension "X" is fixed, or if variable, between what limits.

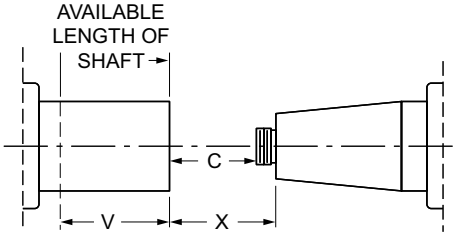

A fixed "X" dimension may require variable positioning on the shaft, allowing for the use of a standard straight bore hub. See illustrations below.

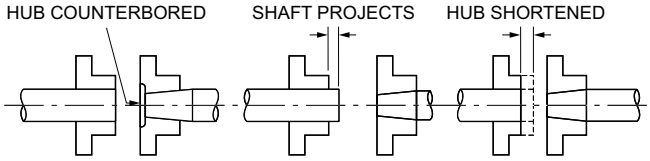

Element and Hub Part Numbers

Omega Coupling Element Part Numbers

Size	Omega Coupling Elements					
	Close Coupled E	Spacer ES	Close Coupled HSU	Spacer HSU	Close Coupled HDY	Spacer HDY
E2	10287330	10287346	10287700	10287811	10287699	10287810
E3	10287331	10287347	10287707	10287818	10287706	10287817
E4	10287332	10287348	10287714	10287825	10287713	10287824
E5	10287333	10287349	10287721	10287832	10287720	10287831
E10	10287334	10287350	10287728	10287839	10287727	10287838
E15	10287335	10287351	10287735	10287846	10287734	10287845
E20	10287336	10287352	10287742	10287853	10287741	10287852
E30	10287337	10287353	10287749	10287860	10287748	10287859
E40	10287338	10287354	10287756	10287867	10287755	10287866
E50	10287339	10287355	10287763	10287874	10287762	10287873
E60	10287340	10287356	10287770	10287881	10287769	10287880
E70	10287341	10287357	10287777	10287888	10287776	10287887
E80	10287342	10287358	10287783	10287895	10287782	10287894
E100	10287343	...	10287790	···	10287789	···
E120	10287344	···	10287797	···	10287796	···
E140	10287345	···	10287804	···	10287803	···

Omega Coupling Hub and Accessory Part Numbers

Size	Omega Hubs		Accessories				
	Rough Stock Bore Carbon Steel	Taper-Lock® Hub	Sleeve Extension	High Speed Rings ①	Carbon Steel Capscrew Kit	Stainless Steel Capscrew Kit	Capscrew Quantity and Size
2	10287359	···	···	10316477	10287681	10287682	Qty. 8 + 8 ② - 1/4-20 X 3/8"
3	10287365	10287464	10287525	10313251	10314073	10287684	Qty. 8 + 8 ② - 1/4-20 X 1/2"
4	10287373	10287465	10287526	10313158	10314073	10287684	Qty. 8 + 8 ② - 1/4-20 X 1/2"
5	10287386	10287466	10287527	10312876	10314073	10287684	Qty. 8 + 8 ② - 1/4-20 X 1/2"
10	10287403	10287467	10287528	10313758	10313938	10287686	12 + 8 ② - 1/4-20 X 1/2"
15	10287416	10288104	10287524	10378907	10467602	10287687	12 + 8 ② - 5/16-18 X 1/2"
20	10287418	10287468	10287529	10287498	10316221	10287689	Qty. 12 - 3/8-16 X 5/8"
30	10287427	10287469	10287530	10287499	10316221	10287689	Qty. 12 - 3/8-16 X 5/8"
40	10287437	10287470	10287531	10287500	10315342	10287691	Qty. 16 - 3/8-16 X 5/8"
50	10287447	10287471	10287532	10287501	10315342	10287691	Qty. 16 - 3/8-16 X 5/8"
60	10287454	10287472	10287533	10287502	10313041	10287693	Qty. 16 - 1/2-13 X 7/8"
70	10287459	10287473	10287534	10287503	10313041	10287693	Qty. 16 -1/2-13 X 7/8"
80	10287460	10287474	10287535	10287504	10313041	10287693	Qty. 16 - 1/2-13 X 7/8"
100	10287461	10287475	10287536	···	10315236	10287695	Qty. 20 - 3/4-10 X 1-1/2"
120	10287462	10287476	10287537	···	10312654	10287965	Qty. 24 - 3/4-10 X 1-1/2"
140	10287463	10287477	10287538	···	10318864	10287698	Qty. 32 - 1.0-8 X 1-1/2"

① High Speed Rings are furnished standard for sizes ES2-R to ES15-R, optional for sizes ES20 to ES80.
② Extra capscrews are provided for spacer couplings with rings.

NOTE: Dimensions subject to change. Certified dimensions of ordered material furnished on request.

Bore Specification

Couplings will be bored in accordance with AGMA Standard 9002 for flexible couplings.

Finished bore hubs will be Class 1 clearance fit unless otherwise specified.

Shaft Dia.	Class 1 Clearance Fit	Interference Fit	Shaft Dia.	Class 1 Clearance Fit	Interference Fit
1/2	0.500-0.501	0.4990-0.4995	2-3/8	2.3750-2.3765	2.373-2.374
5/8	0.625-0.626	0.6240-0.6245	2-1/2	2.5000-2.5015	2.498-2.499
3/4	0.750-0.751	0.7490-0.7495	2-5/8	2.6250-2.6265	2.623-2.624
7/8	0.875-0.876	0.8740-0.8745	2-3/4	2.7500-2.7515	2.748-2.749
1	1.000-1.001	0.9990-0.9995	2-7/8	2.8750-2.8765	2.873-2.874
1-1/8	1.125-1.126	1.1240-1.1245	3	3.0000-3.0015	2.998-2.999
1-1/4	1.250-1.251	1.2490-1.2495	3-1/4	3.2500-3.2515	3.2470-3.2485
1-3/8	1.375-1.376	1.3740-1.3745	3-1/2	3.5000-3.5015	3.4970-3.4985
1-1/2	1.500-1.501	1.4990-1.4995	3-5/8	3.6250-3.6265	3.6220-3.6235
1-5/8	1.625-1.626	1.623-1.624	3-3/4	3.7500-3.7515	3.7470-3.7485
1-3/4	1.750-1.751	1.748-1.749	4	4.0000-4.0015	3.9970-3.9985
1-7/8	1.875-1.876	1.873-1.874	4-1/2	4.500-4.502	4.4965-4.4980
2	2.000-2.001	1.998-1.999	5	5.000-5.002	4.9965-4.9980
2-1/8	2.1250-2.1265	2.123-2.124	5-1/2	5.500-5.502	5.4960-5.4975
2-1/4	2.2500-2.2515	2.248-2.249	6	6.000-6.002	5.9960-5.9975

Bore Sizes (in)

Nominal Shaft Diameter		Key			Setscrew Dia. Class 2B NC Thread	Recommended Tightening Torque (lb-in)
		Width	Depth			
Over	Thru		Sq.	Rect.		
5/16	**7/16**	3/32	3/64	···	1/4 - 20	87
7/16	**9/16**	1/8	1/16	3/64		
9/16	**7/8**	3/16	3/32	1/16		
7/8	**1-1/4**	1/4	1/8	3/32	3/8 - 16①	290
1-1/4	**1-3/8**	5/16	5/32	1/8		
1-3/8	**1-3/4**	3/8	3/16	1/8		
1-3/4	**2-1/4**	1/2	1/4	3/16	1/2 - 13②	620
2-1/4	**2-3/4**	5/8	5/16	7/32	5/8 - 11	1325
2-3/4	**3-1/4**	3/4	3/4	1/4	3/4 - 10	2400
3-1/4	**3-3/4**	7/8	7/8	5/16	7/8 - 9	5200
3-3/4	**4-1/2**	1	1/2	3/8	1-8	7200
4-1/2	**5-1/2**	1-1/4	5/8	7/16		
5-1/2	**6-1/2**	1-1/2	3/4	1/2		
6-1/2	**7-1/2**	1-3/4	7/8	3/4		
7-1/2	**9**	2	1	3/4		

① Maximum setscrew diameter in 1/4 - 20 UNC for size #2 hub.
② Maximum setscrew size for hub size #3 thru #10 is 3/8 - 16 UNC.

Finished Standard Bore Hubs Available (Listed by Material Numbers)

Size Bore	Keyway	2HSB	3HSB	4HSB	5HSB	10HSB	15HSB	20HSB	30HSB	40HSB	50HSB	60HSB
5/8	3/16 x 3/32	10287360	10287366	10287374	···	···	···	···	···	···	···	···
3/4	3/16 x 3/32	10287361	10287367	10287375	10287387	···	···	···	···	···	···	···
7/8	3/16 x 3/32	10287362	10287368	10287376	10287388	10287552	10527502	···	···	···	···	···
15/16	1/4 x 1/8	···	···	10287377	10287389	···	···	···	···	···	···	···
1	1/4 x 1/8	10287363	10287369	10287378	10287390	10287551	10527503	···	···	···	···	···
1-1/16	1/4 x 1/8	···	···	···	10287391	···	···	···	···	···	···	···
1-1/8	1/4 x 1/8	10287364	10287370	10287379	10287392	10287404	10527505	10287417	10287556	···	···	···
1-3/16	1/4 x 1/8	···	···	10287380	10287393	···	···	···	···	···	···	···
1-1/4	1/4 x 1/8	···	10287371	10287381	10287394	10287405	10527507	10287419	10287553	···	···	···
1-5/16	5/16 x 5/32	···	···	···	10287395	···	···	···	···	···	···	···
1-3/8	5/16 x 5/32	···	10287372	10287382	10287396	10287406	10527508	10287495	10287554	···	···	···
1-7/16	3/8 x 3/16	···	···	10287383	10287397	10287407	10527509	···	···	···	···	···
1-1/2	3/8 x 3/16	···	···	10287384	10287398	10287408	10527510	10287420	10287428	10287436	···	···
1-5/8	3/8 x 3/16	···	···	10287385	10287399	10287409	10527511	10288081	10287522	10287523	···	···
1-11/16	3/8 x 3/16	···	···	···	10287400	10287410	10527512	10287423	10287496	···	···	···
1-3/4	3/8 x 3/16	···	···	···	10287401	10287411	10527513	10287421	10287430	10287439	10287448	···
1-7/8	1/2 x 1/4	···	···	···	10287402	10287412	10527514	10287422	10287429	10287438	10287451	···
1-15/16	1/2 x 1/4	···	···	···	···	10287413	10527516	10287557	···	···	···	···
2	1/2 x 1/4	···	···	···	···	10287414	10527517	10287558	10287560	···	···	10287563
2-1/8	1/2 x 1/4	···	···	···	···	10287415	10527518	10287424	10287431	10287440	10287493	10287564
2-3/16	1/2 x 1/4	···	···	···	···	···	···	10287559	···	···	···	···
2-1/4	1/2 x 1/4	···	···	···	···	···	···	10287425	10287432	10287441	10287449	···
2-3/8	5/8 x 5/16	···	···	···	···	···	···	10287426	10287433	10287442	10287494	10287455
2-1/2	5/8 x 5/16	···	···	···	···	···	···	···	10287434	10287443	···	···
2-5/8	5/8 x 5/16	···	···	···	···	···	···	···	10287555	···	···	···
2-11/16	5/8 x 5/16	···	···	···	···	···	···	···	10287497	10287445	···	···
2-3/4	5/8 x 5/16	···	···	···	···	···	···	···	10287561	10287562	···	···
2-7/8	3/4 x 3/8	···	···	···	···	···	···	···	10287435	10287444	10287450	10287456
3-5/16	7/8 x 7/16	···	···	···	···	···	···	···	···	···	10287452	10287457
3-3/8	7/8 x 7/16	···	···	···	···	···	···	···	···	10287446	10287453	10287458

NOTE: Dimensions subject to change. Certified dimensions of ordered material furnished on request.

Maximum Bores with Shallow Keyways

Bore Ranges (in)

Size	Straight Bore		Taper-Lock ①			QD ①		
	Minimum Bore ②	Maximum Bore ③	Bushing Number	Minimum Bore	Maximum Bore ③	Bushing Number	Minimum Bore	Maximum Bore ③
2	No Minimum	1-3/16	NA	···	···	NA	···	···
3	3/8	1-3/8	1008	1/2	1	NA	···	···
4	3/8	1-3/4	1008	1/2	1	JA	3/8	1-3/16
5	3/8	1-15/16	1108	1/2	1-1/8	SH	1/2	1-5/8
10	3/8	2-1/4	1310	1/2	1-7/16	SDS	1/2	1-15/16
15	3/8	2-1/4	1310	1/2	1-7/16	SDS	1/2	1-15/16
20	3/4	2-3/4	1610	1/2	1-11/16	SK	1/2	2-1/2
30	3/4	3-1/4	2012	1/2	2-1/8	SF	1/2	2-15/16
40	3/4	3-3/4	2517	1/2	2-11/16	E	7/8	3-1/2
50	1-1/8	4	2517	1/2	2-11/16	E	7/8	3-1/2
60	1-1/8	4-1/2	3020	15/16	3-1/4	F	1	3-15/16
70	1-3/8	4-7/8	3535	1-3/16	3-15/16	J	1-7/16	4-1/2
80	1-7/8	6-3/4	4040	1-7/16	4-7/16	M	1-15/16	5-1/2
100	1-7/8	7-1/4	4545	1-15/16	4-15/16	M	1-15/16	5-1/2
120	1-7/8	8-1/4	5050	2-5/16	6	N	2-7/16	6
140	1-7/8	9-1/4	7060	4-9/16	7	P	2-15/16	7

① Bushings are not included with bushed hubs. Bushing bore ranges may vary, check with bushing manufacturer.
② Rough bores are slightly undersized to conform with minimum bore specifications.
③ With shallow keyway and steel hub and steel bushing.

PRODUCT CATALOG

Motion Control Solutions
Regal Rexnord

Contact us: rexnord.com/contact

regalrexnord.com

The proper selection and application of products and components, including assuring that the product is safe for its intended use, are the responsibility of the customer. To view our Application Considerations, please visit https://www.regalrexnord.com/Application-Considerations.

To view our Standard Terms and Conditions of Sale, please visit https://www.regalrexnord.com/Terms-and-Conditions-of-Sale (which may redirect to other website locations based on product family).

"Regal Rexnord" is not indicative of legal entity.

Regal Rexnord, Rexnord and Omega are trademarks of Regal Rexnord Corporation or one of its affiliated companies.

© 2014, 2022 Regal Rexnord Corporation, All Rights Reserved.

MCC21022E • Form# 4000